DC BRUSH SERVO MOTORS
GM6000 SERIES MECHANICAL DIMENSIONS

	DIM. "A" - INCH [mm]
GM6060	8.96 [227.6]
GM6090	11.96 [303.8]

* BRAKE MOTOR=
DIM. "A" + 2.62 [66.5]

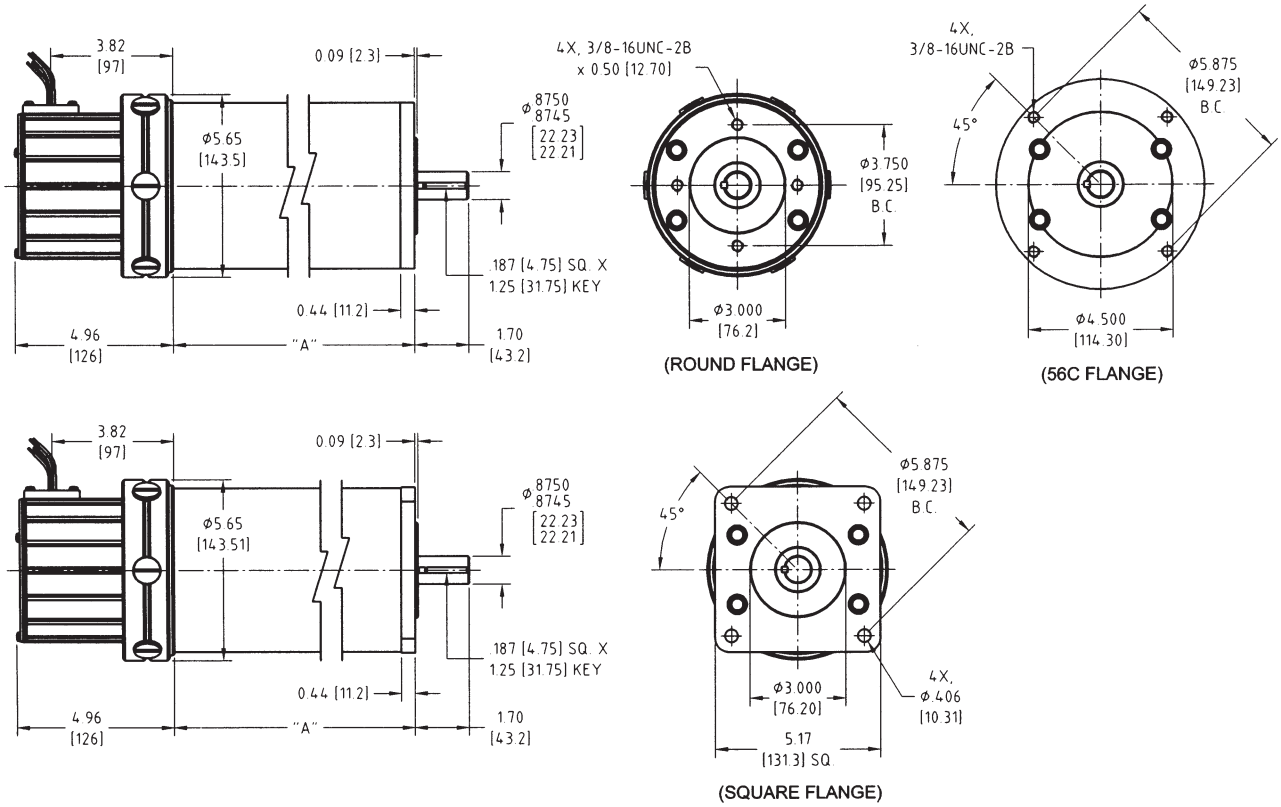

ENCODER ONLY, OR TACHOMETER ONLY	TACHOMETER & ENCODER OR BRUSHLESS RESOLVER & TACHOMETER
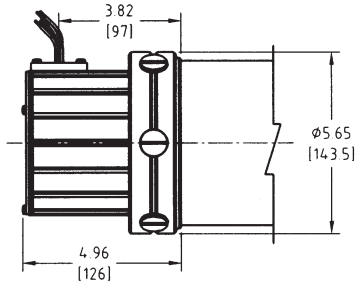	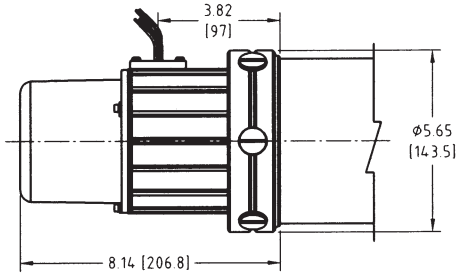

NPT(S) ONLY	LIQUID TIGHT STRAIN RELIEF	MS3102R-24-07P (16 PIN)	TERMINAL BOX
	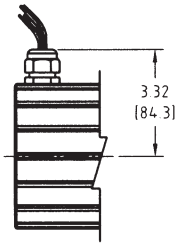	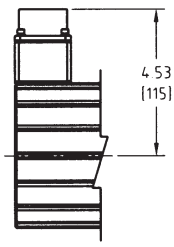	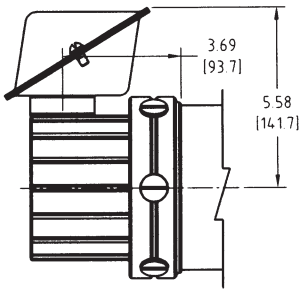

Glentek, Inc.
208 Standard Street • El Segundo, California 90245 USA
(310) 322-3026 • (310) 322-7709 Fax • www.glentek.com